Z:\FOXFAB_DATA\ENGINEERING\2 JOBS\J15156 Rye NH - Benchmark

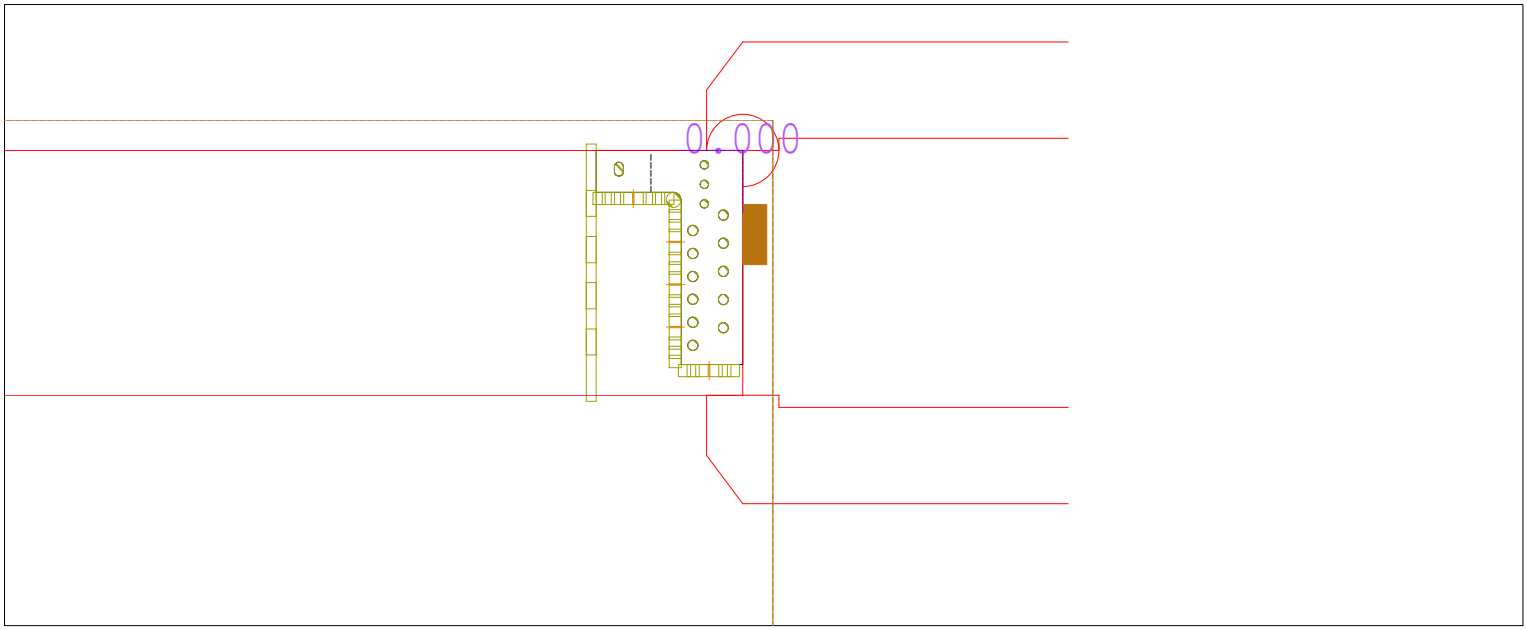


```
 === PART ==================================================================
|NC File Name: Z:\FOXFAB_DATA\ENGINEERING\2 JOBS\J15156 RYE NH - BENCHMARK SENIOR LIVING\200 M
|Draft Num: 70476         |Date: FEB 10 2025       |Version:             |
|Order Num:        |Description:                                  |
 === SHEET ==============Number of Sheets: 1 ==================
|Material: Copper                   |Sheet Size: 144 X 8       |T= 0.120   |
|Num of Parts: 1              |Part Size: 4.790 X 7.000                |
|Part Weight: 0.088 kg               |Sheet Weight: 6.12 kg              |
 === MACHINE ===============================================================
|Model: BO_COPPERBAR BO_CU-10STATIONS                        |Clearance: 0.0174  0.0204  0.023
|Rotate/Turn Sheet: No            |Clamps: 0                      |
|Num of Repositions: 0        |                                  |
 === PROGRAM ===============================================================
|Number: 70476    |Length: 1070      |Programmer:              |
|Notes: VERTICAL OBLONG                                                                    |
 === JOB TIME ==============================================================
|Travel: 00:03  |Tool Change: 03:20    |Punch: 00:43 |Tot: 04:06     |
 === USED TOOLS LIST (A total of      6 tools) ==========================
| ST No.   | Type       | Length    | Width      | Angle   | Hits           |
 ---------------------------------------------------------------------------
| 3 AI     | OB            | 0.4598   | 0.2902     | 0  | 1       |
| 5      | RO            | 0.3441   |      |   | 11       |
| 6      | RO            | 0.2811   |      |   | 3       |
| 2      | RO            | 0.5000   |      |   | 1       |
| 4      | SQ            | 0.4000   |      | 0  | 30       |
| 9      | RE            | 0.3150   | 2.3618     | 0  | 5       |
|                                                          |TOTAL: 51 |
```

Z:\FOXFAB_DATA\ENGINEERING\2 JOBS\J15600 TXST Stem BLDG\200

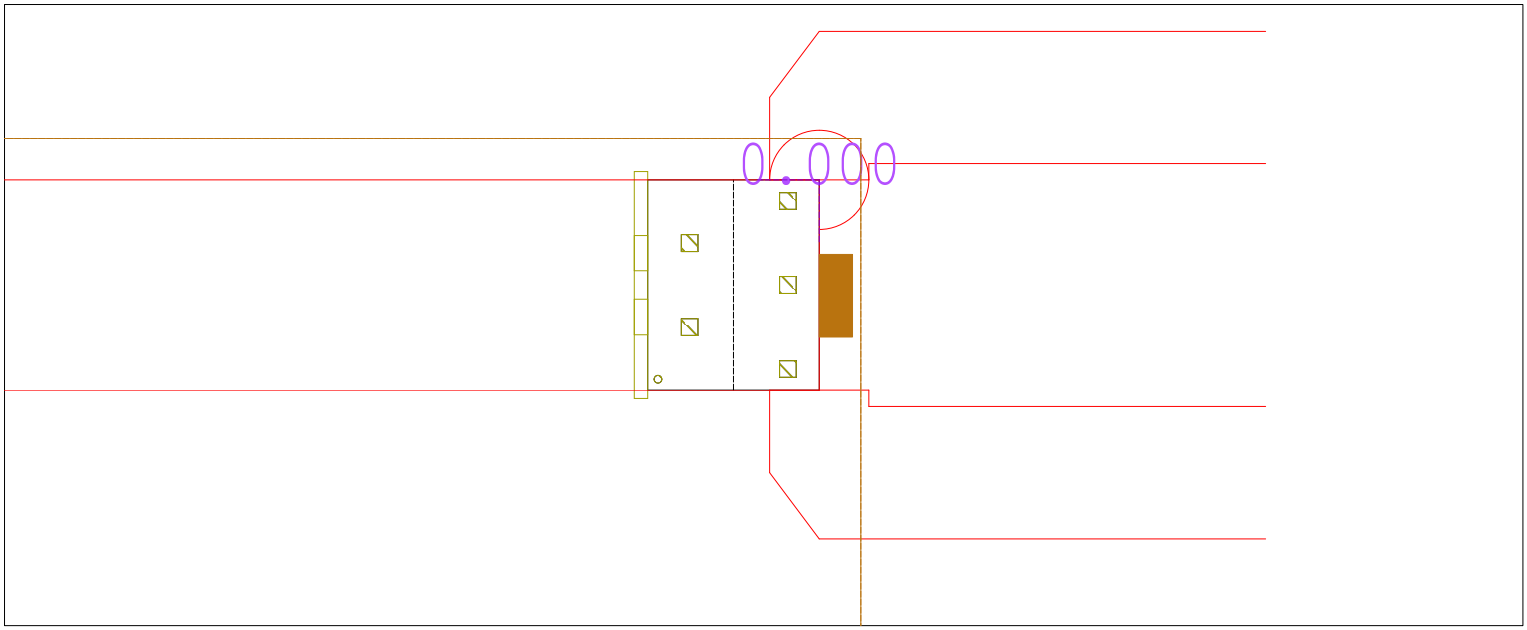


```
 === PART ==================================================================
|NC File Name: Z:\FOXFAB_DATA\ENGINEERING\2 JOBS\J15600 TXST STEM BLDG\200 MECH\205 CNC\70683.
|Draft Num: 70683         |Date: MAY 01 2025       |Version:             |
|Order Num:        |Description:                                  |
 === SHEET ==============Number of Sheets: 1 ==================
|Material: Copper                   |Sheet Size: 144 X 5       |T= 0.250   |
|Num of Parts: 1               |Part Size: 4.090 X 5.000                 |
|Part Weight: 0.217 kg                |Sheet Weight: 7.96 kg              |
 === MACHINE ===============================================================
|Model: BO_COPPERBAR BO_CU-10STATIONS                         |Clearance: 0.0362  0.0425  0.048
|Rotate/Turn Sheet: No             |Clamps: 0                       |
|Num of Repositions: 0        |                                     |
 === PROGRAM ===============================================================
|Number: 70683    |Length: 503      |Programmer:              |
|Notes:                                                                |
 === JOB TIME ==============================================================
|Travel: 00:01  |Tool Change: 01:00    |Punch: 00:11 |Tot: 01:12     |
 === USED TOOLS LIST (A total of      3 tools) ==========================
| ST No.   | Type       | Length    | Width      | Angle   | Hits           |
 ---------------------------------------------------------------------------
| 5      | RO            | 0.1902   |      |   | 1       |
| 4      | SQ            | 0.4000   |      | 0  | 5       |
| 9      | RE            | 0.3150   | 2.3618     | 0  | 3       |
|                                                          |TOTAL: 9 |
```

Z:\FOXFAB_DATA\ENGINEERING\2 JOBS\J15600 TXST Stem BLDG\200

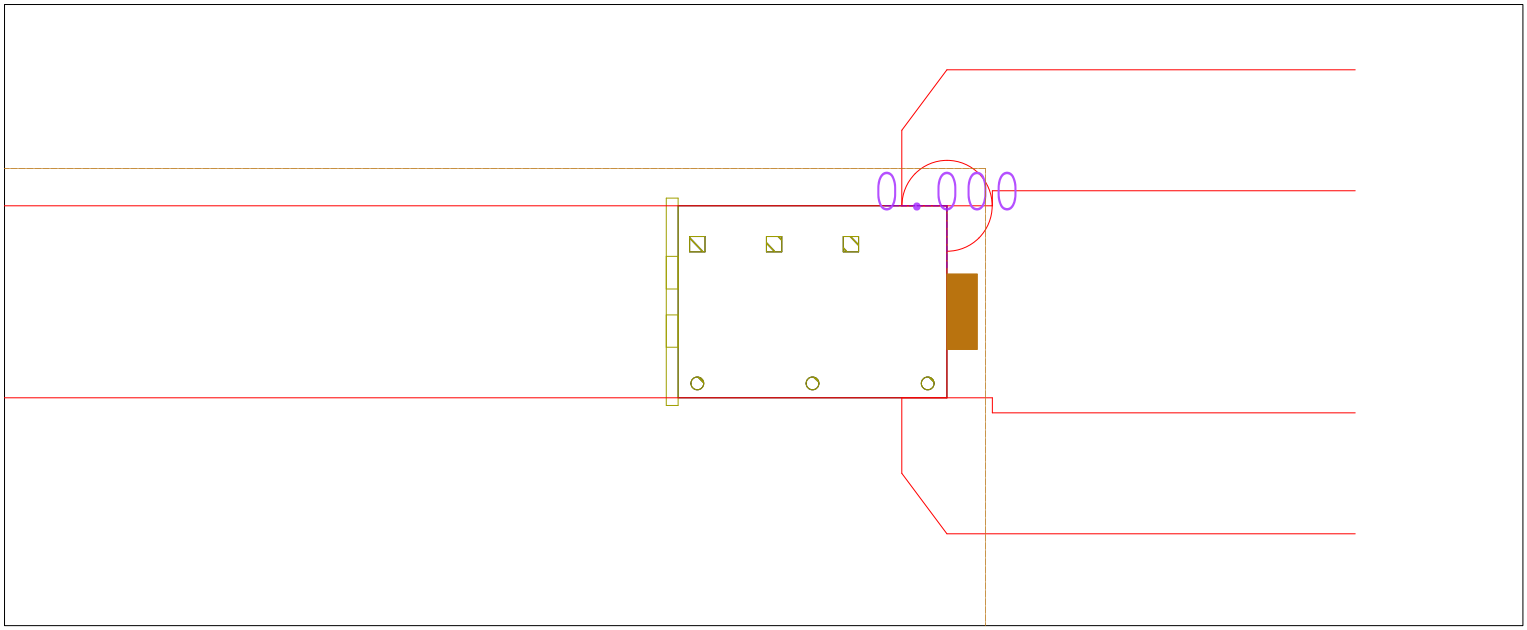


```
 === PART ==================================================================
|NC File Name: Z:\FOXFAB_DATA\ENGINEERING\2 JOBS\J15600 TXST STEM BLDG\200 MECH\205 CNC\70685.
|Draft Num: 70685         |Date: MAY 01 2025       |Version:             |
|Order Num:        |Description:                                  |
 === SHEET ==============Number of Sheets: 1 ==================
|Material: Copper                   |Sheet Size: 144 X 5       |T= 0.250   |
|Num of Parts: 1              |Part Size: 7.000 X 5.000                 |
|Part Weight: 0.379 kg               |Sheet Weight: 7.96 kg              |
 === MACHINE ===============================================================
|Model: BO_COPPERBAR BO_CU-10STATIONS                        |Clearance: 0.0362  0.0425  0.048
|Rotate/Turn Sheet: No            |Clamps: 0                       |
|Num of Repositions: 0        |                                    |
 === PROGRAM ===============================================================
|Number: 70685    |Length: 560      |Programmer:              |
|Notes:                                                                |
 === JOB TIME ==============================================================
|Travel: 00:01  |Tool Change: 02:00    |Punch: 00:11 |Tot: 02:12     |
 === USED TOOLS LIST (A total of      3 tools) ==========================
| ST No.   | Type       | Length    | Width      | Angle   | Hits           |
 ---------------------------------------------------------------------------
| 4      | SQ            | 0.4000   |      | 0  | 3       |
| 5      | RO            | 0.3441   |      |   | 3       |
| 9      | RE            | 0.3150   | 2.3618     | 0  | 3       |
|                                                          |TOTAL: 9 |
```

Z:\FOXFAB_DATA\ENGINEERING\2 JOBS\J15353 Batesville\200 Mech\J

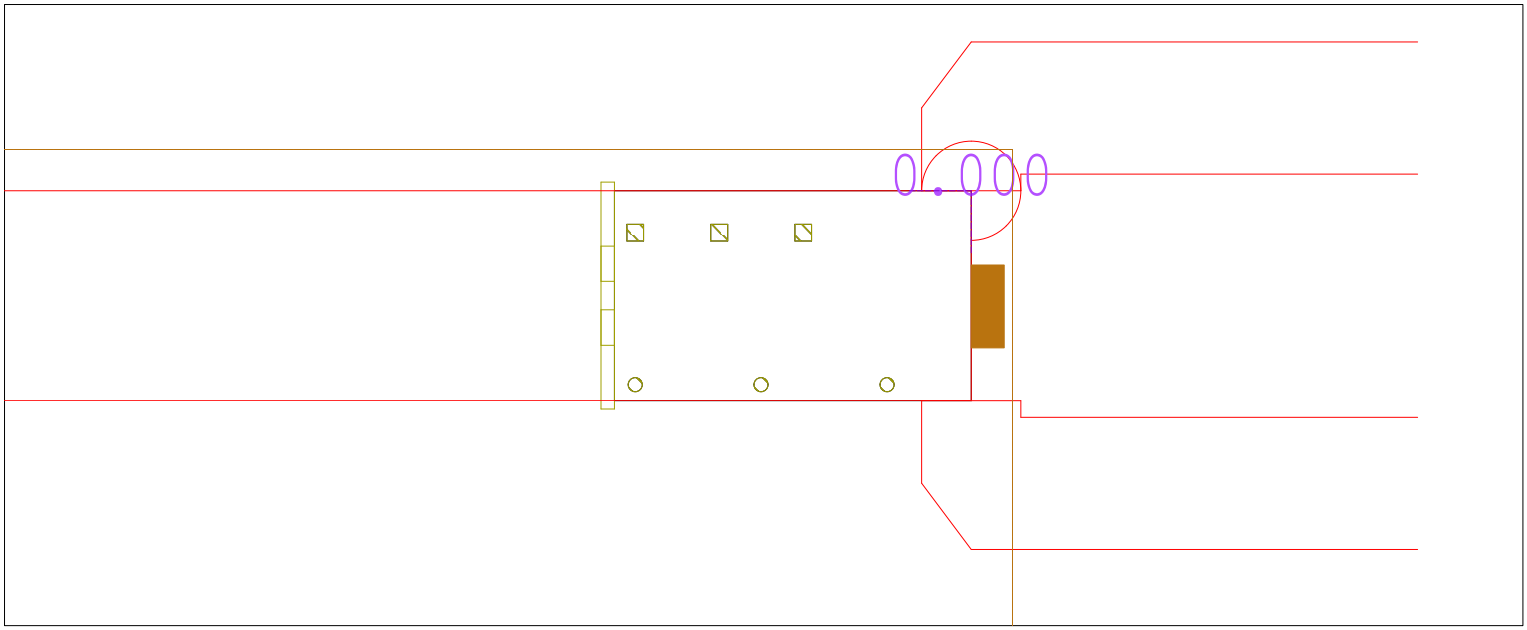


```
 === PART ==================================================================
|NC File Name: Z:\FOXFAB_DATA\ENGINEERING\2 JOBS\J15353 BATESVILLE\200 MECH\J15353-03\205 CNC\
|Draft Num: 80708         |Date: NOV 17 2025       |Version:             |
|Order Num:        |Description:                                  |
 === SHEET ==============Number of Sheets: 1 ==================
|Material: Copper                   |Sheet Size: 144 X 5       |T= 0.250   |
|Num of Parts: 1               |Part Size: 8.500 X 5.000                 |
|Part Weight: 0.462 kg                |Sheet Weight: 7.96 kg              |
 === MACHINE ===============================================================
|Model: BO_COPPERBAR BO_CU-10STATIONS                          |Clearance: 0.0362  0.0425  0.048
|Rotate/Turn Sheet: No             |Clamps: 0                       |
|Num of Repositions: 0        |                                    |
 === PROGRAM ===============================================================
|Number: 80708    |Length: 550      |Programmer:              |
|Notes:                                                                |
 === JOB TIME ==============================================================
|Travel: 00:01  |Tool Change: 02:00    |Punch: 00:11 |Tot: 02:12     |
 === USED TOOLS LIST (A total of      3 tools) ==========================
| ST No.   | Type       | Length    | Width      | Angle   | Hits           |
 ---------------------------------------------------------------------------
| 4      | SQ            | 0.4000   |      | 0  | 3       |
| 5      | RO            | 0.3441   |      |   | 3       |
| 9      | RE            | 0.3150   | 2.3618     | 0  | 3       |
|                                                          |TOTAL: 9 |
```

Z:\FOXFAB_DATA\ENGINEERING\2 JOBS\J15353 Batesville\200 Mech\J

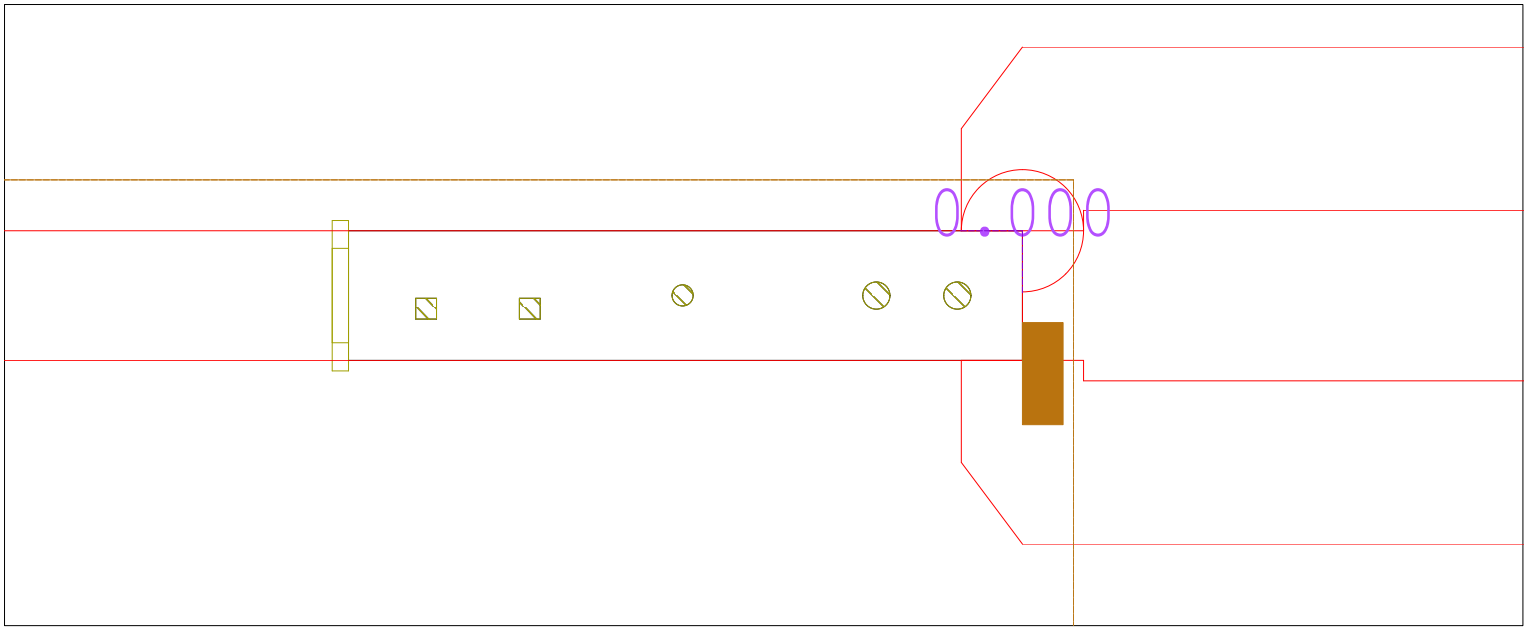


```
 === PART ==================================================================
|NC File Name: Z:\FOXFAB_DATA\ENGINEERING\2 JOBS\J15353 BATESVILLE\200 MECH\J15353-03\205 CNC\
|Draft Num: 80709         |Date: NOV 17 2025       |Version:             |
|Order Num:        |Description:                                |
 === SHEET ==============Number of Sheets: 1 ==================
|Material: Copper                  |Sheet Size: 144 X 2.5       |T= 0.250   |
|Num of Parts: 1              |Part Size: 13.000 X 2.500                |
|Part Weight: 0.350 kg               |Sheet Weight: 3.98 kg              |
 === MACHINE ===============================================================
|Model: BO_COPPERBAR BO_CU-10STATIONS                        |Clearance: 0.0362  0.0425  0.048
|Rotate/Turn Sheet: No            |Clamps: 0                      |
|Num of Repositions: 0        |                                   |
 === PROGRAM ===============================================================
|Number: 80709    |Length: 541      |Programmer:              |
|Notes:                                                                |
 === JOB TIME ==============================================================
|Travel: 00:01  |Tool Change: 01:20    |Punch: 00:09 |Tot: 01:29     |
 === USED TOOLS LIST (A total of      4 tools) ==========================
| ST No.   | Type       | Length    | Width      | Angle   | Hits           |
 ---------------------------------------------------------------------------
| 4      | SQ            | 0.4000   |      | 0  | 2       |
| 5      | RO            | 0.5300   |      |   | 2       |
| 3      | RO            | 0.4130   |      |   | 1       |
| 9      | RE            | 0.3150   | 2.3618     | 0  | 2       |
|                                                          |TOTAL: 7 |
```

Z:\FOXFAB_DATA\ENGINEERING\2 JOBS\J15353 Batesville\200 Mech\J

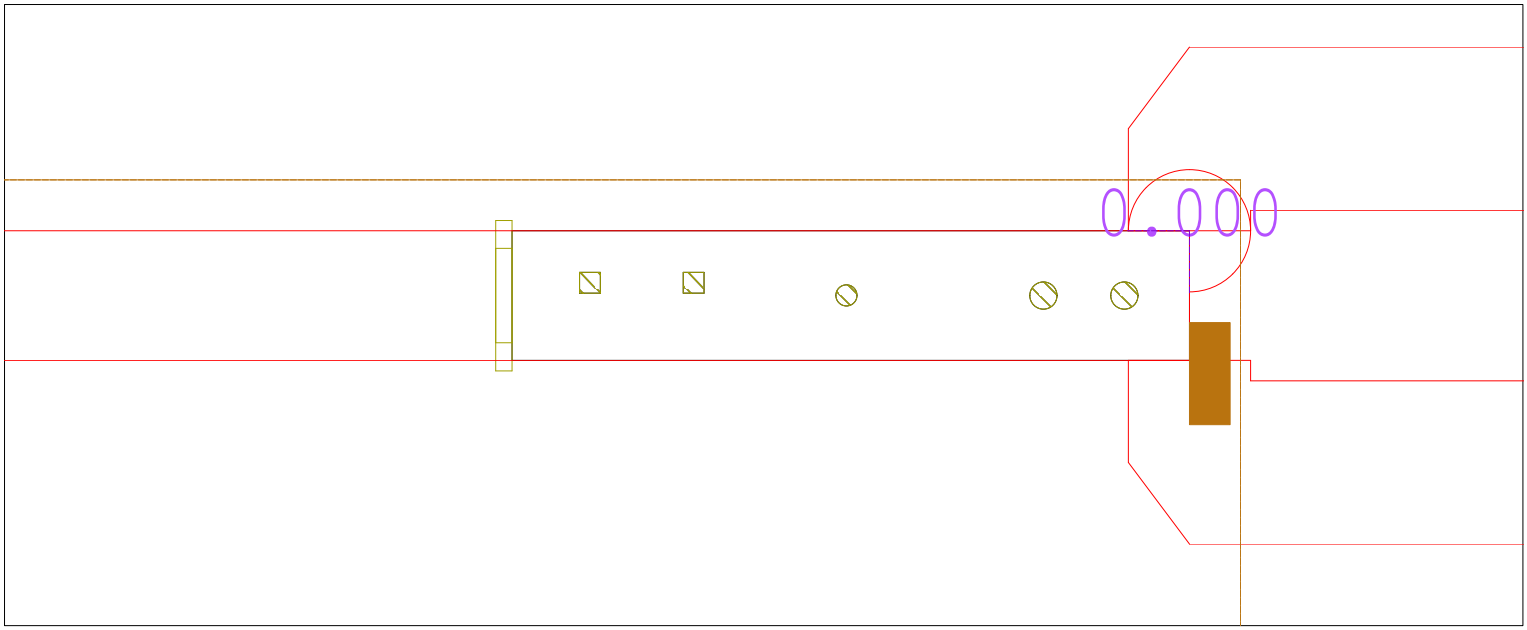


```
 === PART ==================================================================
|NC File Name: Z:\FOXFAB_DATA\ENGINEERING\2 JOBS\J15353 BATESVILLE\200 MECH\J15353-03\205 CNC\
|Draft Num: 80710         |Date: NOV 17 2025       |Version:             |
|Order Num:        |Description:                                  |
 === SHEET ==============Number of Sheets: 1 ==================
|Material: Copper                   |Sheet Size: 144 X 2.5       |T= 0.250   |
|Num of Parts: 1               |Part Size: 13.064 X 2.500                 |
|Part Weight: 0.351 kg                |Sheet Weight: 3.98 kg               |
 === MACHINE ===============================================================
|Model: BO_COPPERBAR BO_CU-10STATIONS                          |Clearance: 0.0362  0.0425  0.048
|Rotate/Turn Sheet: No             |Clamps: 0                        |
|Num of Repositions: 0        |                                      |
 === PROGRAM ===============================================================
|Number: 80710    |Length: 549      |Programmer:              |
|Notes:                                                                |
 === JOB TIME ==============================================================
|Travel: 00:01  |Tool Change: 01:20    |Punch: 00:09 |Tot: 01:29     |
 === USED TOOLS LIST (A total of      4 tools) ==========================
| ST No.   | Type       | Length    | Width      | Angle   | Hits           |
 ---------------------------------------------------------------------------
| 3      | RO            | 0.4130   |      |   | 1       |
| 5      | RO            | 0.5300   |      |   | 2       |
| 4      | SQ            | 0.4000   |      | 0  | 2       |
| 9      | RE            | 0.3150   | 2.3618     | 0  | 2       |
|                                                          |TOTAL: 7 |
```

Z:\FOXFAB_DATA\ENGINEERING\2 JOBS\J15353 Batesville\200 Mech\J

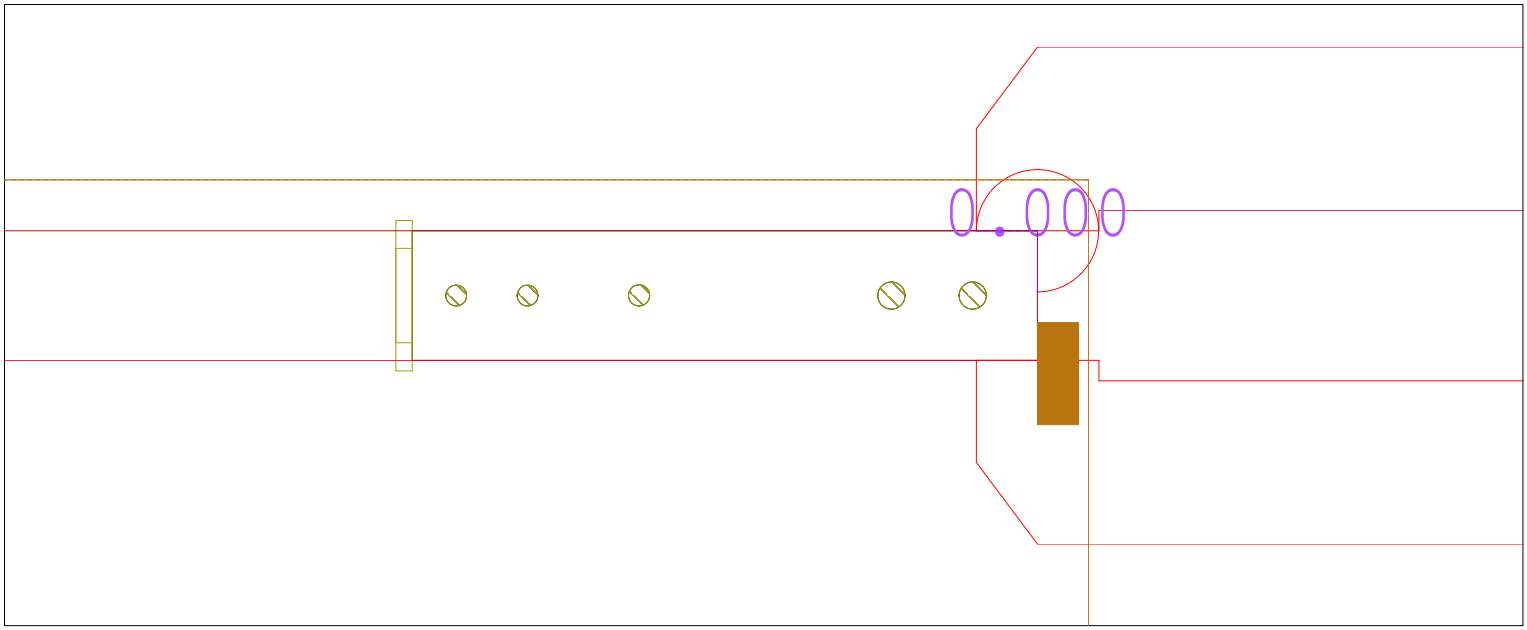


```
 === PART ==================================================================
|NC File Name: Z:\FOXFAB_DATA\ENGINEERING\2 JOBS\J15353 BATESVILLE\200 MECH\J15353-03\205 CNC\
|Draft Num: 80711          |Date: NOV 17 2025       |Version:              |
|Order Num:        |Description:                                  |
 === SHEET ==============Number of Sheets: 1 ==================
|Material: Copper                   |Sheet Size: 144 X 2.5       |T= 0.250    |
|Num of Parts: 1               |Part Size: 12.064 X 2.500                  |
|Part Weight: 0.324 kg                |Sheet Weight: 3.98 kg                |
 === MACHINE ===============================================================
|Model: BO_COPPERBAR BO_CU-10STATIONS                          |Clearance: 0.0362  0.0425  0.048
|Rotate/Turn Sheet: No             |Clamps: 0                        |
|Num of Repositions: 0        |                                    |
 === PROGRAM ===============================================================
|Number: 80711    |Length: 552      |Programmer:               |
|Notes:                                                                |
 === JOB TIME ==============================================================
|Travel: 00:01  |Tool Change: 01:20    |Punch: 00:09 |Tot: 01:29     |
 === USED TOOLS LIST (A total of      4 tools) ==========================
| ST No.   | Type       | Length    | Width      | Angle   | Hits           |
 ---------------------------------------------------------------------------
| 3      | RO            | 0.4130   |      |   | 1       |
| 2      | RO            | 0.4059   |      |   | 2       |
| 5      | RO            | 0.5300   |      |   | 2       |
| 9      | RE            | 0.3150   | 2.3618     | 0  | 2       |
|                                                          |TOTAL: 7 |
```

Z:\FOXFAB_DATA\ENGINEERING\2 JOBS\J15353 Batesville\200 Mech\J

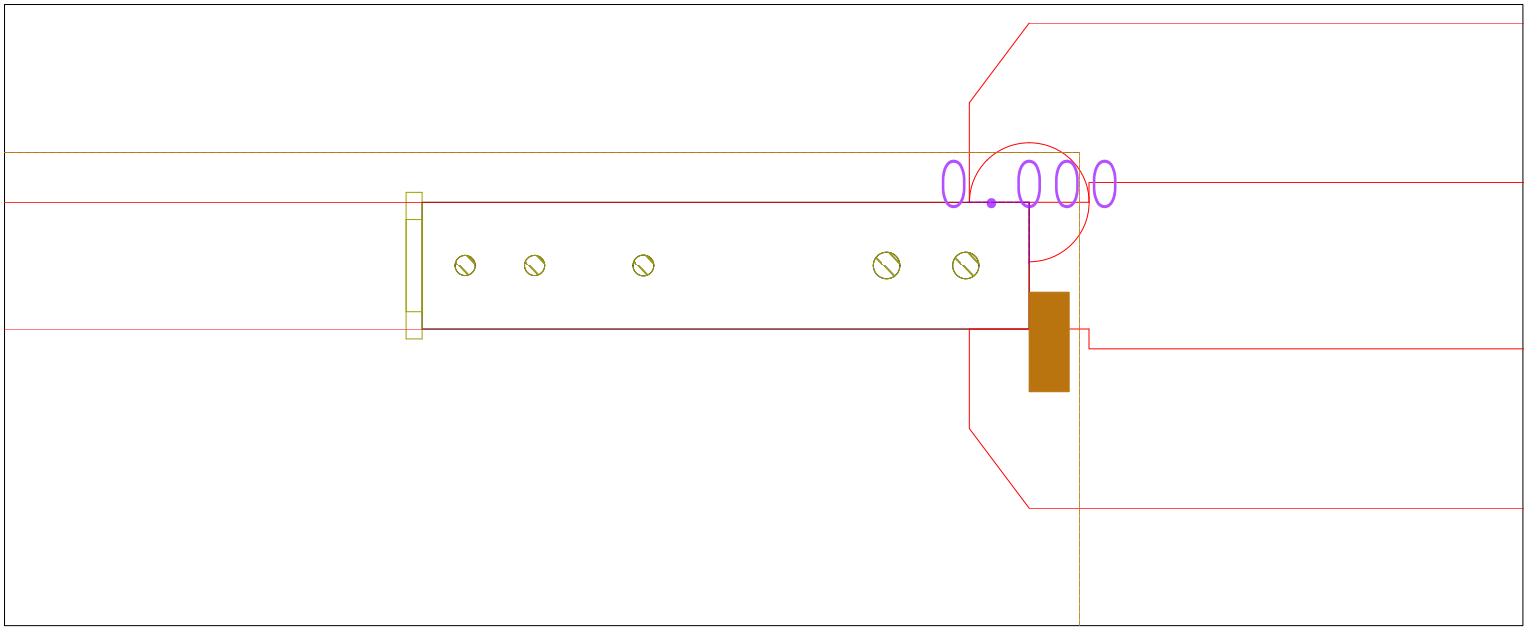


```
 === PART ==================================================================
|NC File Name: Z:\FOXFAB_DATA\ENGINEERING\2 JOBS\J15353 BATESVILLE\200 MECH\J15353-03\205 CNC\
|Draft Num: 80712         |Date: NOV 17 2025       |Version:             |
|Order Num:        |Description:                                  |
 === SHEET ==============Number of Sheets: 1 ==================
|Material: Copper                   |Sheet Size: 144 X 2.5       |T= 0.250   |
|Num of Parts: 1               |Part Size: 12.000 X 2.500                 |
|Part Weight: 0.323 kg                |Sheet Weight: 3.98 kg               |
 === MACHINE ===============================================================
|Model: BO_COPPERBAR BO_CU-10STATIONS                          |Clearance: 0.0362  0.0425  0.048
|Rotate/Turn Sheet: No             |Clamps: 0                       |
|Num of Repositions: 0        |                                     |
 === PROGRAM ===============================================================
|Number: 80712    |Length: 547      |Programmer:              |
|Notes:                                                                |
 === JOB TIME ==============================================================
|Travel: 00:01  |Tool Change: 01:20    |Punch: 00:09 |Tot: 01:29     |
 === USED TOOLS LIST (A total of      4 tools) ==========================
| ST No.   | Type       | Length    | Width      | Angle   | Hits           |
 ---------------------------------------------------------------------------
| 2      | RO            | 0.4059   |      |   | 2       |
| 5      | RO            | 0.5300   |      |   | 2       |
| 3      | RO            | 0.4130   |      |   | 1       |
| 9      | RE            | 0.3150   | 2.3618     | 0  | 2       |
|                                                          |TOTAL: 7 |
```

Z:\FOXFAB_DATA\ENGINEERING\2 JOBS\J15353 Batesville\200 Mech\J

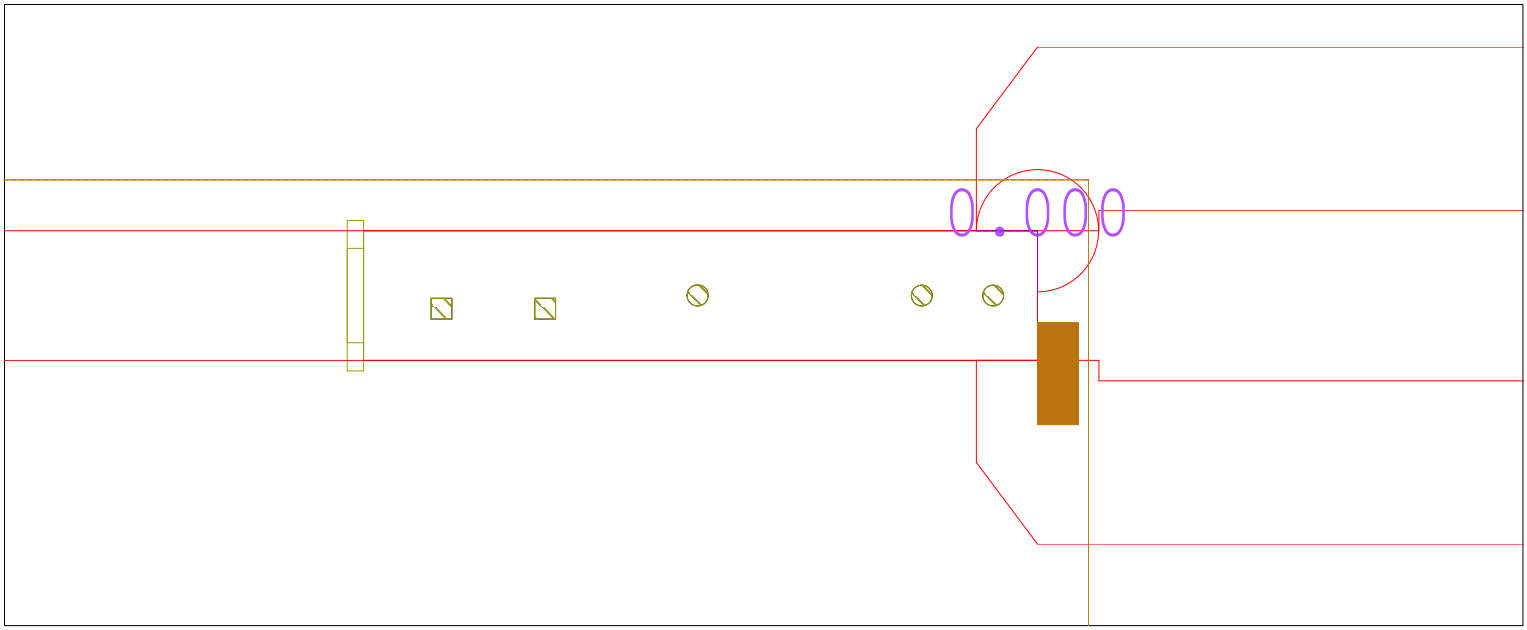


```
 === PART ==================================================================
|NC File Name: Z:\FOXFAB_DATA\ENGINEERING\2 JOBS\J15353 BATESVILLE\200 MECH\J15353-03\205 CNC\
|Draft Num: 80713         |Date: NOV 17 2025       |Version:             |
|Order Num:        |Description:                                  |
 === SHEET ==============Number of Sheets: 1 ==================
|Material: Copper                   |Sheet Size: 144 X 2.5       |T= 0.250   |
|Num of Parts: 1              |Part Size: 13.000 X 2.500                 |
|Part Weight: 0.352 kg                |Sheet Weight: 3.98 kg               |
 === MACHINE ===============================================================
|Model: BO_COPPERBAR BO_CU-10STATIONS                          |Clearance: 0.0362  0.0425  0.048
|Rotate/Turn Sheet: No            |Clamps: 0                        |
|Num of Repositions: 0        |                                    |
 === PROGRAM ===============================================================
|Number: 80713    |Length: 545      |Programmer:              |
|Notes:                                                                |
 === JOB TIME ==============================================================
|Travel: 00:01  |Tool Change: 01:20    |Punch: 00:09 |Tot: 01:29     |
 === USED TOOLS LIST (A total of      4 tools) ==========================
| ST No.   | Type       | Length    | Width      | Angle   | Hits           |
 ---------------------------------------------------------------------------
| 4      | SQ            | 0.4000   |      | 0  | 2       |
| 2      | RO            | 0.4059   |      |   | 2       |
| 3      | RO            | 0.4130   |      |   | 1       |
| 9      | RE            | 0.3150   | 2.3618     | 0  | 2       |
|                                                          |TOTAL: 7 |
```

Z:\FOXFAB_DATA\ENGINEERING\2 JOBS\J15353 Batesville\200 Mech\J

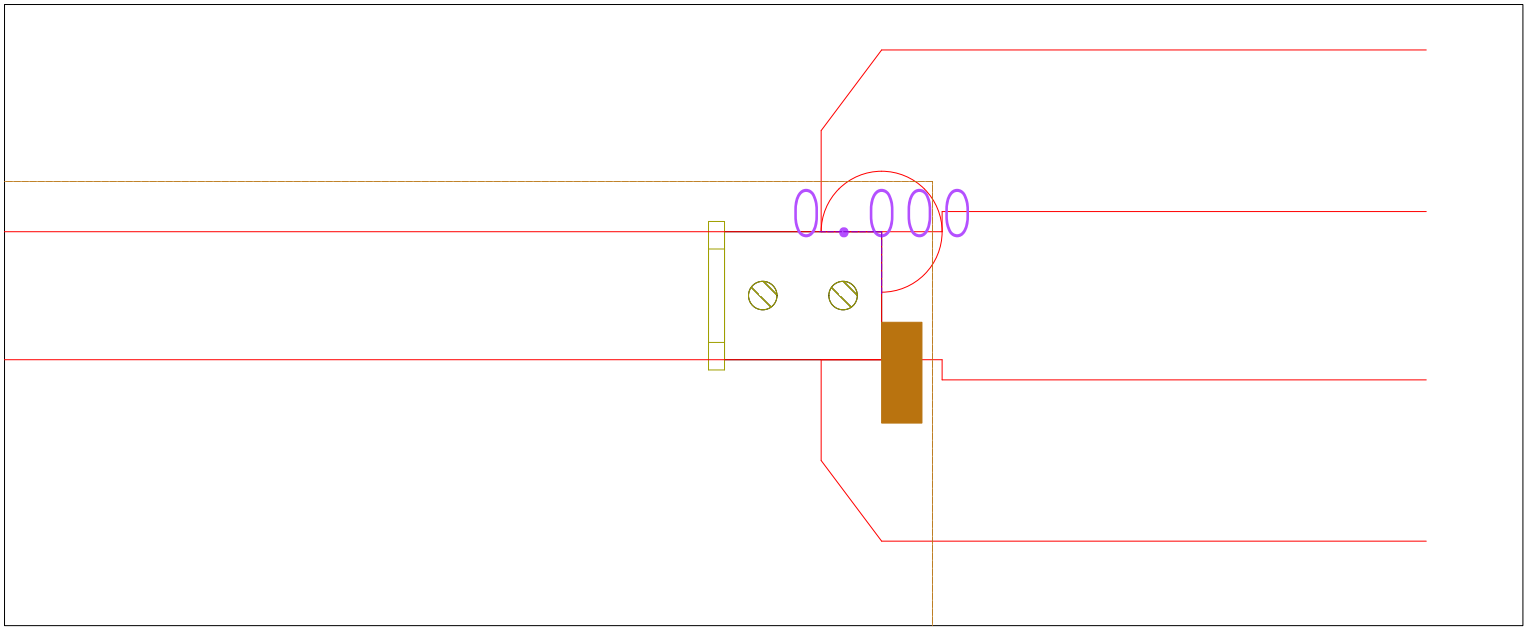


```
 === PART ==================================================================
|NC File Name: Z:\FOXFAB_DATA\ENGINEERING\2 JOBS\J15353 BATESVILLE\200 MECH\J15353-03\205 CNC\
|Draft Num: 80818         |Date: JAN 15 2026       |Version:             |
|Order Num:        |Description:                                  |
 === SHEET ==============Number of Sheets: 1 ==================
|Material: Copper                   |Sheet Size: 144 X 2.5       |T= 0.250   |
|Num of Parts: 1              |Part Size: 3.065 X 2.500                 |
|Part Weight: 0.079 kg               |Sheet Weight: 3.98 kg              |
 === MACHINE ===============================================================
|Model: BO_COPPERBAR BO_CU-10STATIONS                          |Clearance: 0.0362  0.0425  0.048
|Rotate/Turn Sheet: No            |Clamps: 0                       |
|Num of Repositions: 0        |                                    |
 === PROGRAM ===============================================================
|Number: 80818    |Length: 436      |Programmer:              |
|Notes:                                                                |
 === JOB TIME ==============================================================
|Travel: 00:00  |Tool Change: 00:40    |Punch: 00:05 |Tot: 00:45     |
 === USED TOOLS LIST (A total of      2 tools) ==========================
| ST No.   | Type       | Length    | Width      | Angle   | Hits           |
 ---------------------------------------------------------------------------
| 5      | RO            | 0.5630   |      |   | 2       |
| 9      | RE            | 0.3150   | 2.3618     | 0  | 2       |
|                                                          |TOTAL: 4 |
```